BUMBA EDUCATION ZONE PRIMARY EXAMINATIONS

2025 - 2026 STANDARD 8 ZONAL MOCK

MATHEMATICS

(100 marks)

Tuesday, 04th March, 2026

TIME ALLOWED: 2hrs
8:00am – 10:00am

NAME OF CANDIDATE: …… **SEX:** ……

SCHOOL: …… **ZONE**: ……

INSTRUCTIONS

- This paper contains **6** pages. **Please check**.
- This paper contains two sections; **A** and **B**. Answer all questions in both sections.

SECTION A Multiple Choice (40 Marks)

1. Write 278.697 to 3 significant figures.

A. 279 C. 278.600
B. 278.7 D. 278.700

2. Express 16 hours as a fraction of a day.

A. $\frac{1}{4}$ C. $\frac{1}{2}$
B. $\frac{2}{3}$ D. $\frac{1}{3}$

Figure 1 below shows angles of different values where BC is perpendicular to AB and line BD bisects the angle at B.

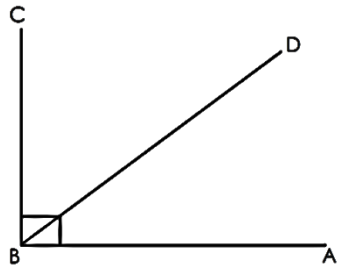

3. What is the value of angle ABD?

A. 90° C. 120°
B. 45° D. 60°

4. A train covered 50km in 15 minutes. Find its speed.

A. 15km/hr C. 75km/hr
B. 50km/hr D. 200km/hr

5. The sum of two numbers is 78. One of the numbers is the product of 26 and 2. Find the other number.

A. 52 B. 78 C. 26 D. 130

6. What is the place value of 2 in 0.124?

A. Tenth C. Hundredth
B. Hundreds D. Tens

7. Find the perimeter of a square whose side is 0.5m.

A. 0.2m C. 2m
B. 0.21m D. 20m

8. Simplify 12y + 3x – x + 2y.

A. 14y – 2x C. 14y + 4x
B. 14y + 2x D. 10y + 2x

9. If 17men can spend 60kg of flour in a fortnight, how much flour can they spend in a week?

A. 30kg C. 51kg
B. 34kg D. 60kg

10. Solve the inequality $2y + 5 \geq 13$

A. $Y \geq 8$ C. $Y \geq 18$
B. $Y \leq 14$ D. $Y \geq 4$

Table 1 shows the body mass of four learners at Nkhwangu School. Use it to answer **question 7 and 8**.

Name of a learner	Mass (kg)
Okelo	37.2
Mercy	36.8
Peter	37.4
Getu	36.9

11. What was the difference in body mass between Okelo and Getu?

A. 0.3kg C. 0.13kg
B. 0.4kg D. 0.1kg

12. Calculate the average body mass of Peter and Mercy.

A. 37kg C. 37.1kg
B. 38kg D. 74.2kg

13. Sautso measured an angle and found that it was 101°. What type of angle is it?

A. Acute C. Reflex
B. Obtuse D. Right angle

14. Take away 20 from the product of 12 and 10.

A. 80 C. 120
B. 100 D. 2

15. Given 37, 17, 24 and 20, find the median.

A. 22 C. 23
B. 21 D. 19

16. How many litres of water are in the container?

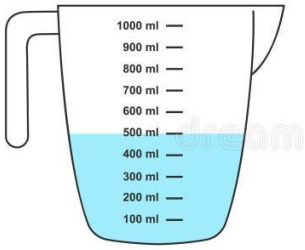

A. 5 litres C. 500 litres
B. 50 litres D. 0.5 litres

17. Praise bought 20 mangoes at 5 for K200. How much did she pay for the mangoes?

A. K8 B. K80 C. K800 D. K8000

Table 2 shows insurance premium paid per month for properties in a certain year. Use it to answer **question 18**

Property	Premium / month (K)
House	90000
Truck	40000

18. If Esnart insured two trucks and one house for one month only, how much did she pay altogether?

A. K80, 000 C. K130, 000
B. K170, 000 D. K220, 000

19. Mr Chaula will celebrate his diamond jubilee in the next two decades. How old is he now?

A. 60 years C. 45 years
B. 25 years D. 40 years

20. How many seconds are in 10 minutes?

A. 60 seconds C. 6000 seconds
B. 600 seconds D. 6 seconds

SECTION B (60 marks)

21. a) A dealer bought a bicycle at K12 and sold it for K15. Find his profit percent.

(3 marks)

b) A minibus left Rumphi at 7:15am and reached Ng'onga 24km away at 8:00am. Calculate its average speed.

(3 marks)

22. a) The perimeter of a rectangular plot is 84m. If its length is 23m, find its width.

(4 marks)

b) Simplify $\frac{0.024}{0.8 \times 0.001}$

(3 marks)

Table 3 below shows rate for tax per month. Use it to answer **question 23a**

SALARY PER MONTH	RATE FOR TAX
First K24, 000	0% (tax free)
Next K15, 000	15%
Next K40, 000	25%

23. a) If Mr Ziwalo earns K75, 000 per month, calculate his monthly tax.

(5 marks)

b) A dealer paid K40, 000.00 as custom duty for goods worth K160, 000.00. At what rate was the custom duty charged?

(3 marks)

24. a) A certain sum of money was shared in the ratio 5:46. If the least share was K144, find the total sum of money shared.

(4 marks)

b) Simplify $4 - 2\frac{3}{4}$

(3 marks)

25. Solve the equation 4b + 18 = 30 + b

(3 marks)

26. Figure below is a composite shape made up of a trapezium ABCD and a semi-circle DEC.

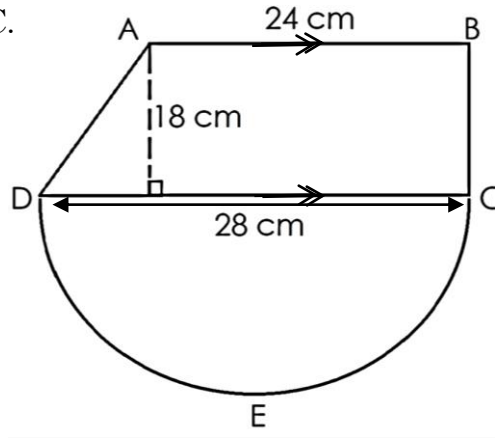

Calculate the total area of the figure.
(Take $\pi = \frac{22}{7}$)

(6 marks)

27. a) i. Using a ruler and a protractor, construct a square ABCD whose side is 4cm.

(3 marks)

ii. Measure length of diagonal line AC.

(1 mark)

b) Esther bought 18 mangoes. If $\frac{2}{9}$ were bad, how many mangoes were good to eat?

(3 marks)

28. a) Find the total amount of money to be paid back on a loan of K45, 000.00 compounded yearly for 2 years at 20% per annum.

(5 marks)

b) The heights of three learners are 135cm, 129cm and 140cm. When one joint them, their average height becomes 134cm. How tall is the fourth learner?

(4 marks)

29. Table 4 below shows the temperature reading of a certain school for four days

DAY	**TEMPERATURE (°c)**
Monday	30
Tuesday	26
Wednesday	27
Thursday	32

Using a scale of 2cm to represent 10°c on the vertical axis, draw a bar graph to represent the information.

(7 marks)

END OF QUESTION PAPER!